# Connection options for the ASI5720/ASI5722 and ASI6720/ASI6722

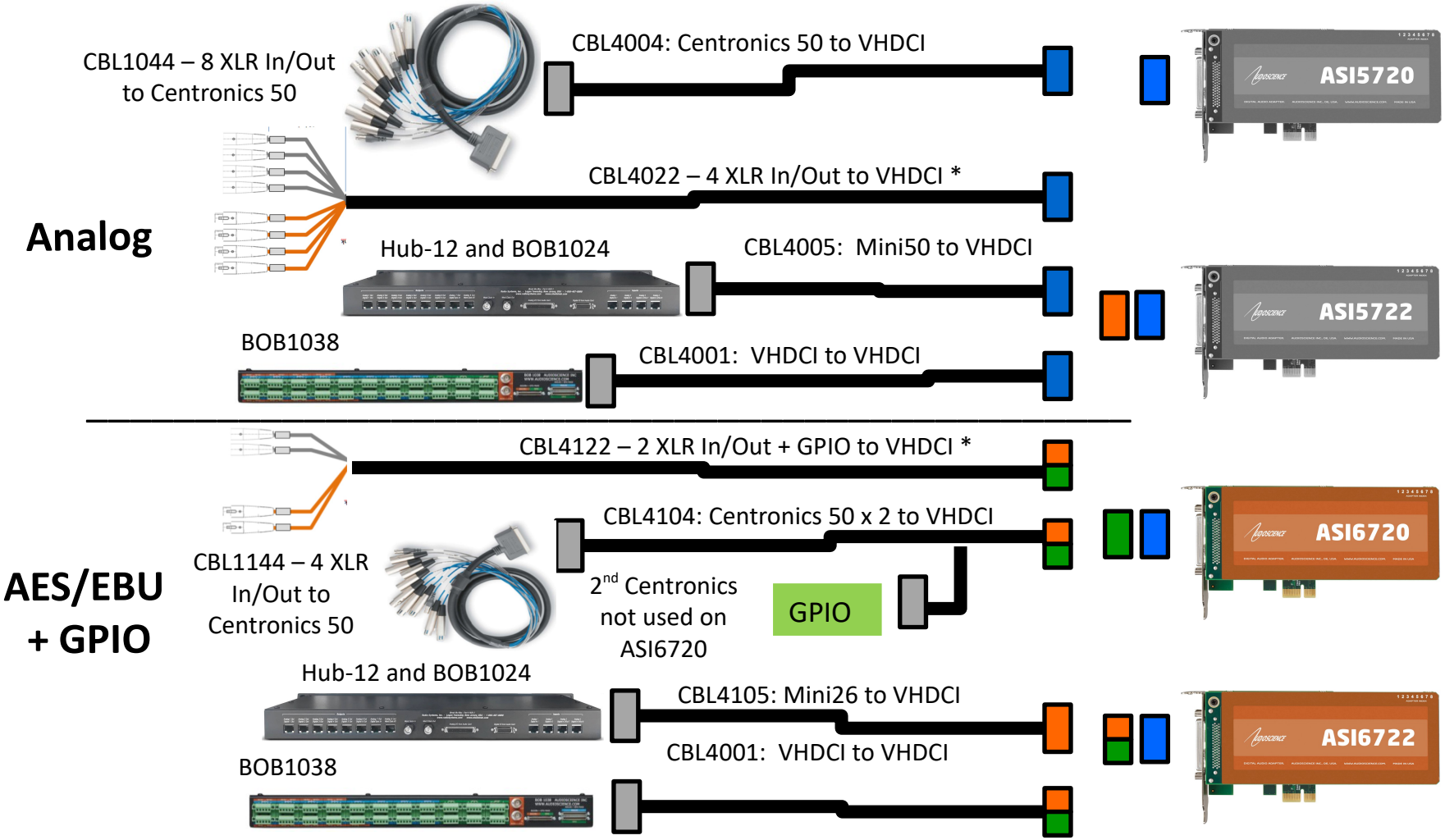


Blue = Analog  Orange = AES/EBU  Green = GPIO

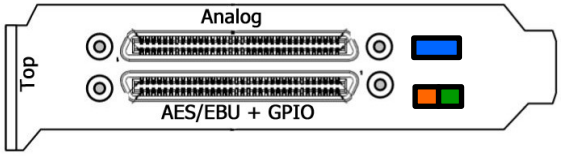


* Recommended cable for this group